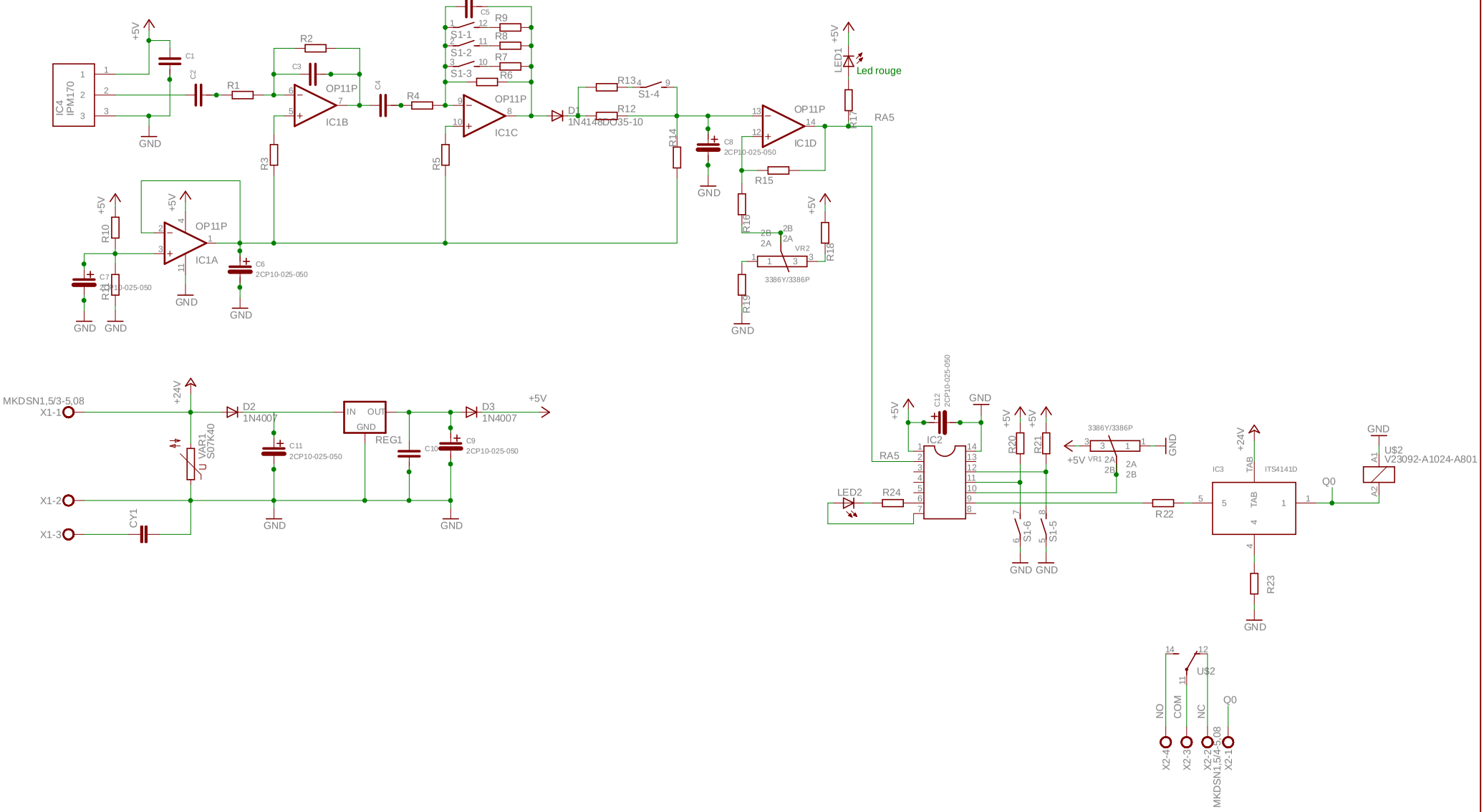

TITLE: WRI092-161124	
Document Number:	REV:
Date: 22/11/2016 18:59:56	Sheet: 1/1